FIG. 3

REPEATER

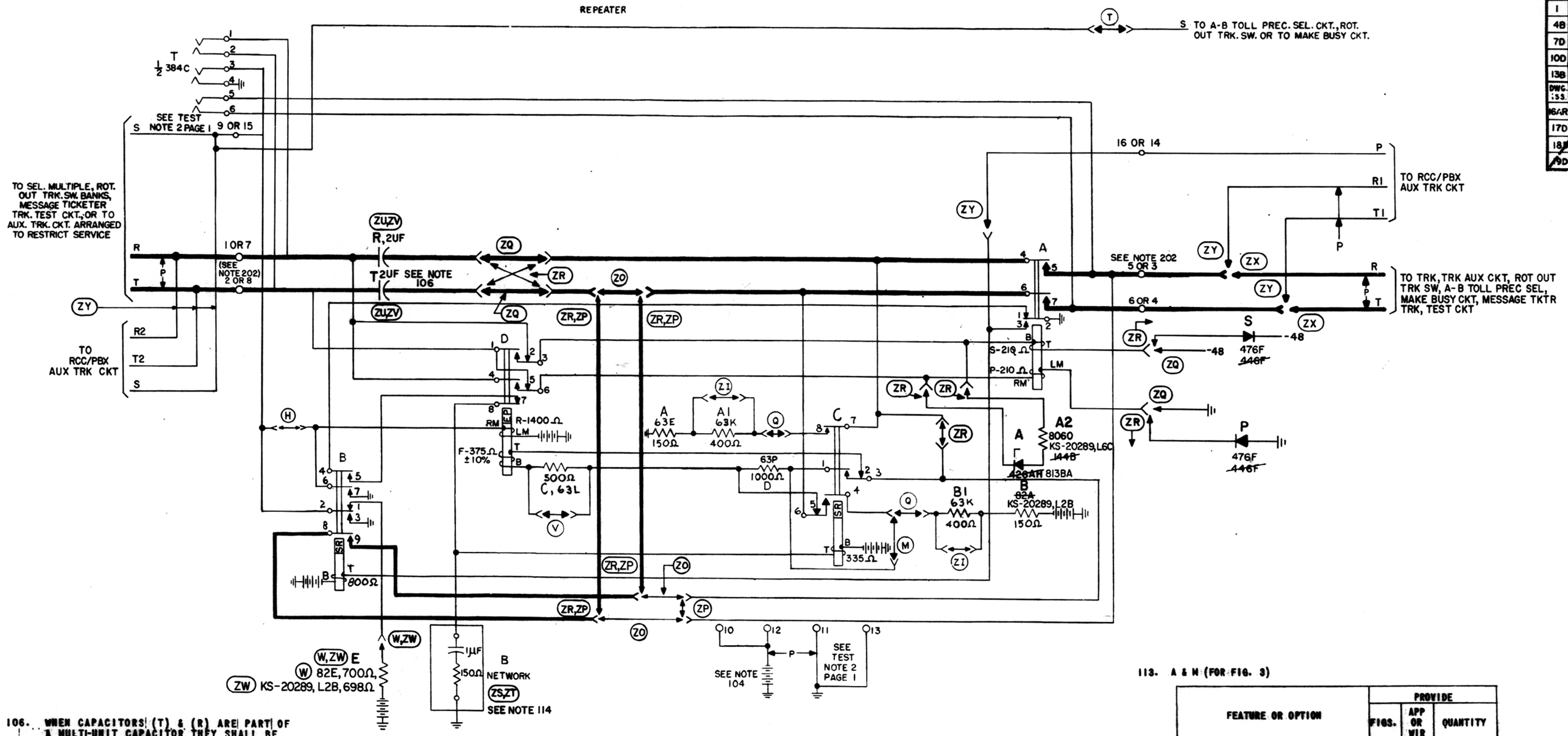

106. WHEN CAPACITORS (T) & (R) ARE PART OF A MULTI-UNIT CAPACITOR THEY SHALL BE BALANCED WITHIN 0.11UF.

107. WHEN AN A-B TOLL PREC. SEL. CKT. IS CONNECTED BETWEEN THE OUTGOING END OF THIS CKT. AND THE TRK., ALL THE TRK. CONDUCTORS CONNECTED TO THE BANK LEVELS OF THE SEL. SHALL HAVE THE SAME RES. AND APPROX. THE SAME MAKE UP OF OPEN WIRE AND CABLE.

113. A & H (FOR FIG. 3)

FEATURE OR OPTION		PROVIDE FIGS.	APP OR WIR	QUANTITY
TRUNK TO NO. 1 CROSSBAR IF CONNECTED TO A SUBSCRIBER SENDER OR TRUNK TO PANEL	CONDUC. LOOP 500Ω OR OVER		ZI, V, Q	
	CONDUC. LOOP UNDER 500Ω		Q	
TRUNK TO NO. 1 CROSSBAR	CONDUC. LOOP 500Ω OR OVER		H, V	