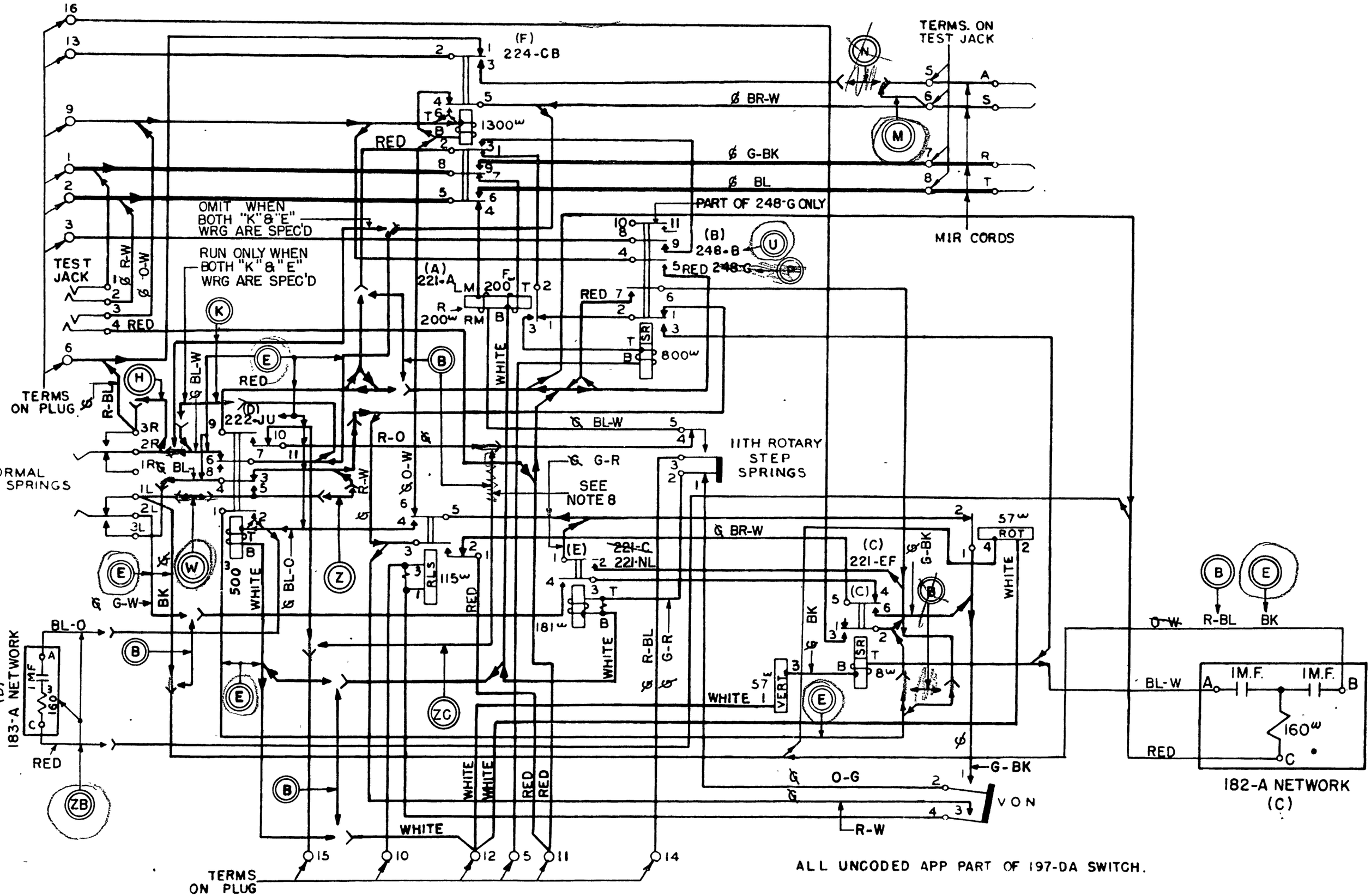

ALL UNCODED APP PART OF 197-DA SWITCH.