Fig. 1
Basic circuit

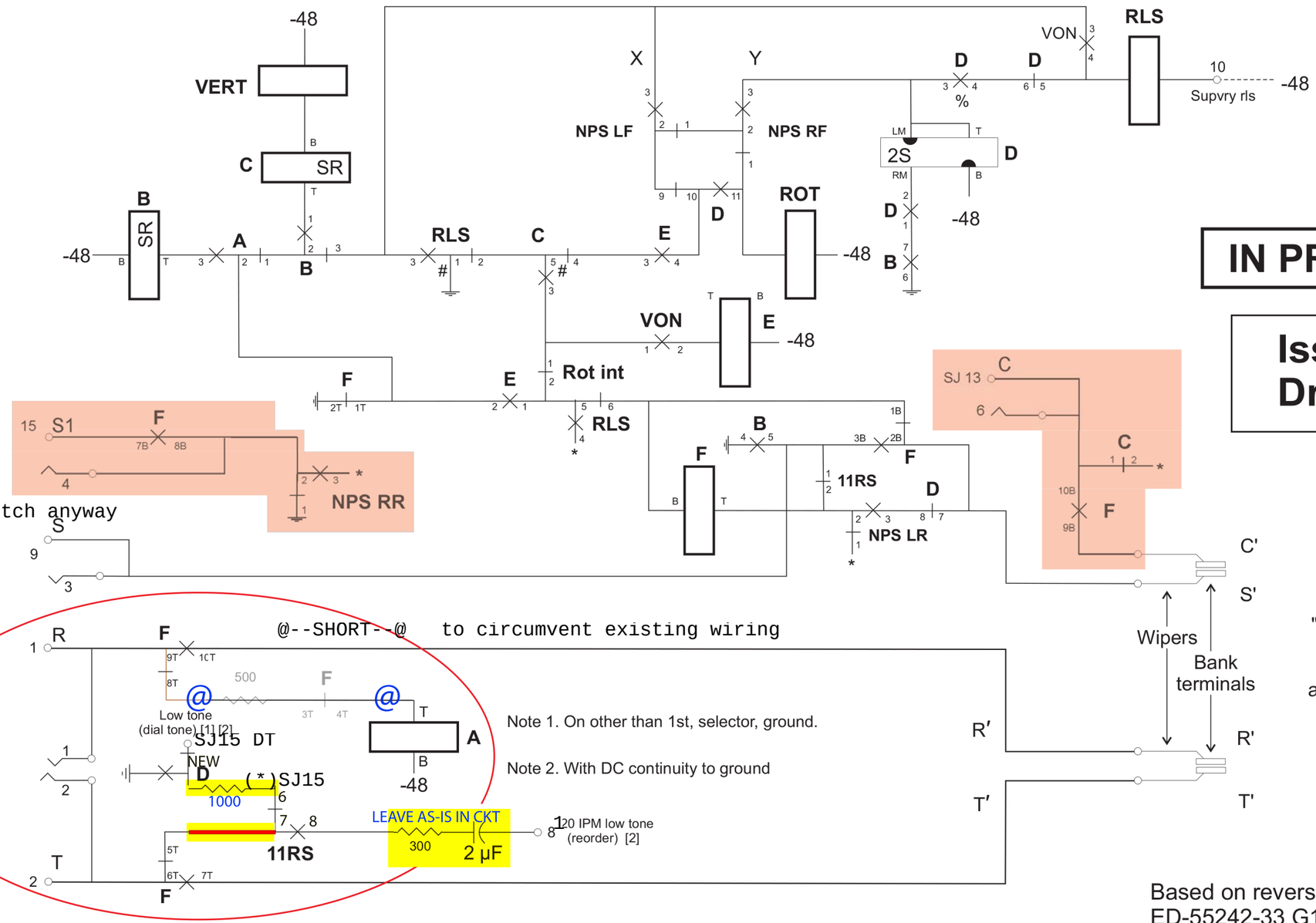

CONVERSION STEPS 2/2021
1. Disconnect B-8
2. Yellow wire F-8T to A-T
3. Re-wire 11RS: Can leave 8 open because 11RS resets switch anyway
4. Wire SJ15 for DT
(*)Adding D contacts allows DT to be silenced upon Dig Abs
5. disconnect F-5T,F-4T, etc.

SR: Slow release
2S: "Two-step"
VON: Vertical off-normal
NPS: Normal post springs
#: "Make before break"
%: Early operate
*: Unused spring

Note 1. On other than 1st, selector, ground.

Note 2. With DC continuity to ground

"Prime" notation on these leads for reference only and are not "official"

Proposed modifications

Not used

IN PROCESS

Issue 01
Draft C

Based on reverse engineering of an ED-55242-33 G13 by Will Sherwood.

Step-by-step system ED-55242-33 G11 switch Modification to local selector			
num SXS-SD1053	iss 01	date 2019.11.29	sht 01
proj SXS study	type CDR	dwn DAK	of 01

laboratories dak
scientific and technical undertakings
Alamogordo, New Mexico