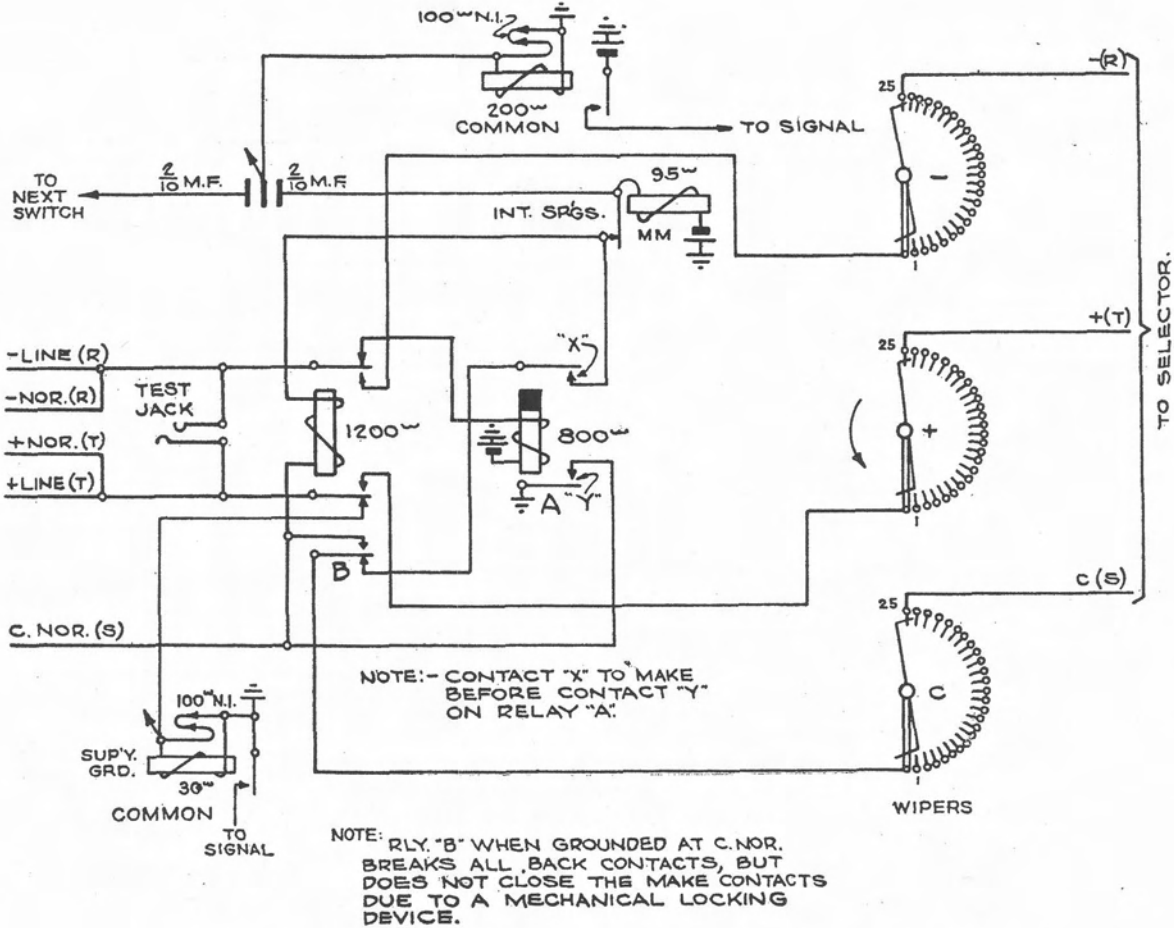

Figure 4. Rotary lineswitch circuit, nonhoming type.