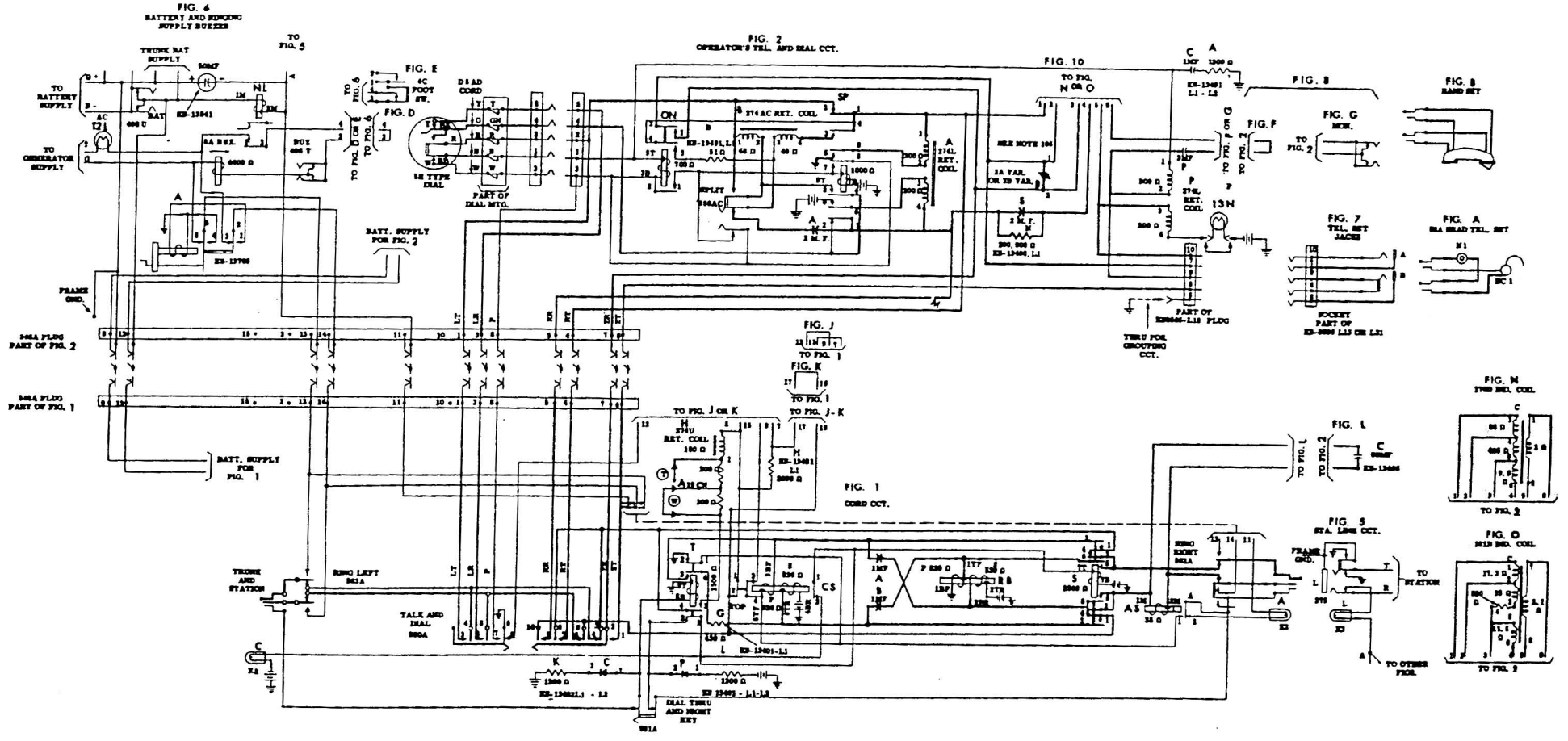

Exhibit 1. 555 PBX Switchboard Circuit Diagrams.